Intego Treatment center care and cleaning plan

A continuously updated list of approved care, cleaning, and disinfecting agents can be downloaded from the Dentsply Sirona internet website under REF 59 70 905: www.dentsplysirona.com/manuals

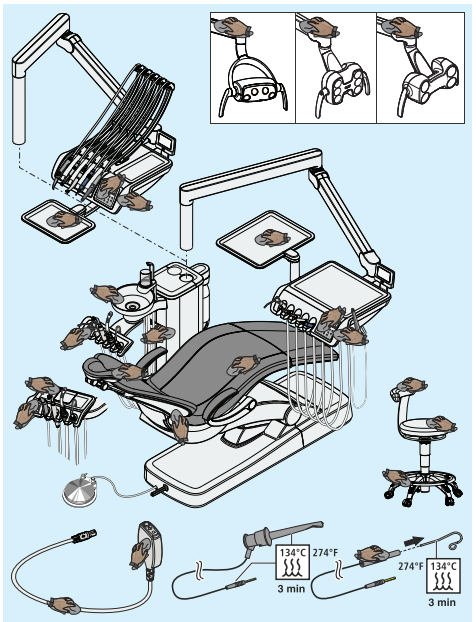

After each patient

Clean/disinfect surfaces

CAUTION! Use only care, cleaning, and disinfecting agents approved by Dentsply Sirona!

- Disinfect surfaces and upholstery
- Disinfect user interfaces
- Care, disinfection/sterilization of treatment instruments (see the operating instructions of the respective treatment instruments)
- Clean and disinfect/sterilize the components of the ApexLocator
- Disinfect instrument holders
- Disinfect handles
- Disinfecting the tray
- Disinfect connectors for suction hose cleaning
- Maintain and clean the operating light (see LEDlight, LEDlight Plus or LEDview Plus operating instructions)

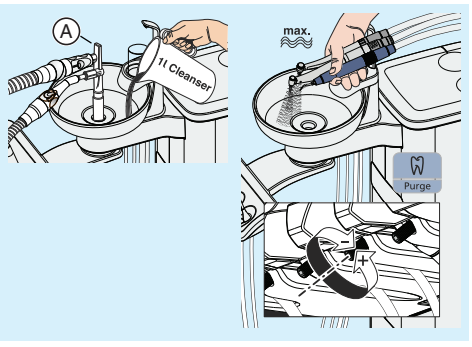

Daily

Disinfect the suction hoses using the cleaning adapters (A)

- daily at noon and
- and at the end of the work day.

Purge water lines

Purge the tumbler, the 3-way syringes, and the instrument water lines with the purge function or manually.

- at the start of every work day
- at the end of the work day

Sterilize silicone mats and handle covers

Thermally disinfect the tray and cup holder

Disinfect dentist and assistant element

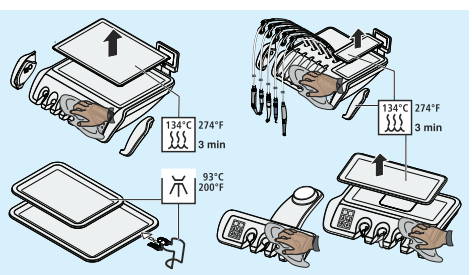

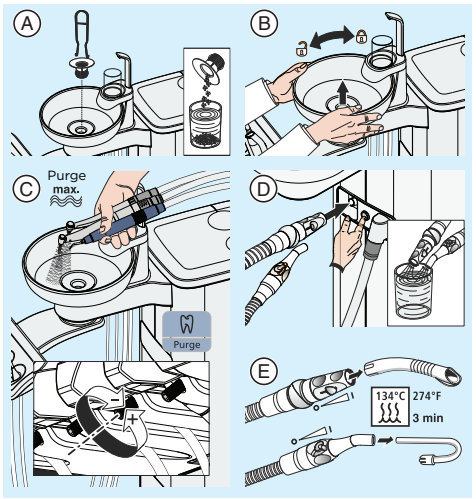

Clean/disinfect the water paths and suction system

CAUTION! Use only care, cleaning, and disinfecting agents approved by Dentsply Sirona!

A) Clean the gold trap

CAUTION! Dispose of amalgam residues in an environmentally correct manner!

B) Clean/disinfect the (removable) cuspidor bowl (special cleaning agent))

C) Purge the instruments that were used with the purge function or manually

D) Clean the suction hoses

NOTE: If no hose cleaning present, aspirate a glass of cold water.

E) Sterilize suction handpieces

To prevent reflux, please use the suction cannula with supplementary air intakes.

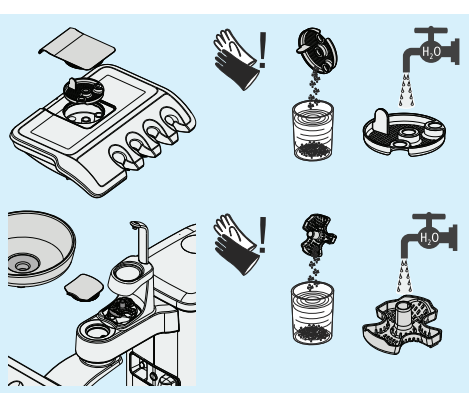

Empty the central suction sieve

Wear protective gloves when emptying the central suction sieve!

Collect amalgam residues in a closed container with water.

CAUTION! Dispose of amalgam residues in an environmentally correct manner.

Clean emptied suction sieve under running water.

Weekly

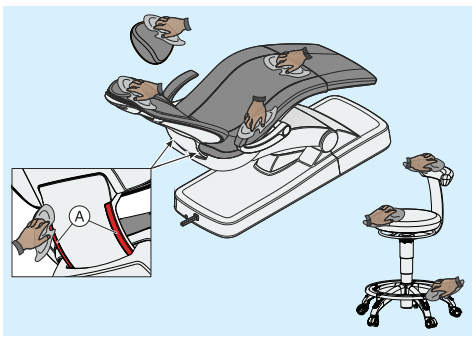

Clean and care for upholstery

CAUTION! Use only cleaning and care agents for upholstery approved by Dentsply Sirona!

Follow the instructions for use of the cleaning and care agents exactly.

Prevent agent FD360 from contacting chrome-plated surfaces.

Cleaning the bottom surface of the mount (A) for the backrest component

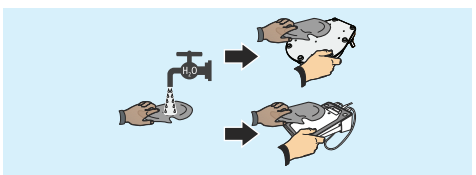

Clean the foot switch

Clean the underside of the foot switch with a moist cloth (water).

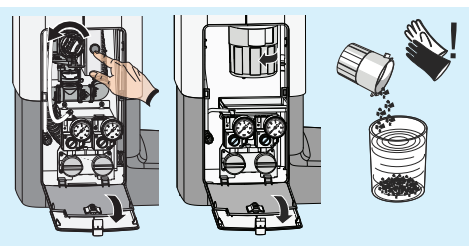

Monthly or as required

Clean the filter insert of the standard wet suction

On the Start screen, press the "Extract residual water" button before removing the filter for cleaning.

Emptying the collector of the air jet pump

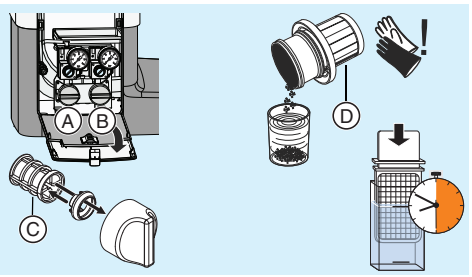

Change filter (C) for water (A) and air (B)

Empty the sediment tank (D) (optional)

Wear protective gloves when emptying the sediment tank!

Microbiological water test

- At regular intervals according to results and
- after periods of disuse > 1 week.

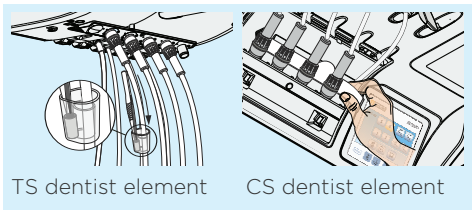

TS dentist element

Change the cotton wool roll on the turbine hose

CS dentist element

Change oil collector

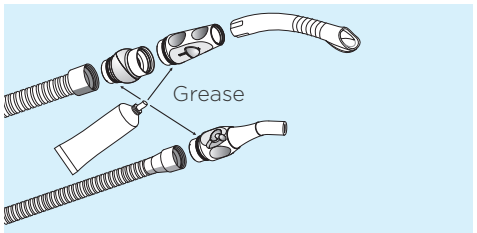

Lubricating suction handpieces

Separate suction handpieces and grease the O-rings after thermal disinfection or sterilization as well as once a week.

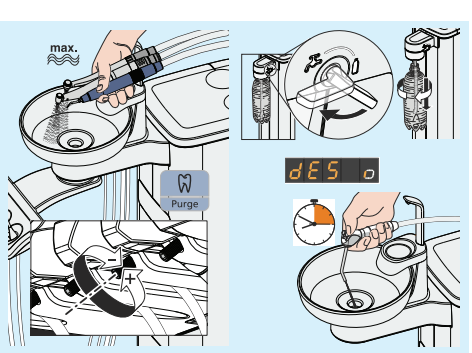

Sanitize the treatment center

1. Set maximum water flow on the instruments
2. Place tumbler under the tumbler outlet
3. Switch to fresh water bottle
4. Fill the disinfectant for disinfecting the water lines into fresh water bottle
5. Starting sanitation
6. Treating the water lines with the disinfectant for disinfecting the water lines
7. Allow 24 hours reaction time
8. Purging water lines with water
9. Cleaning the suction hoses

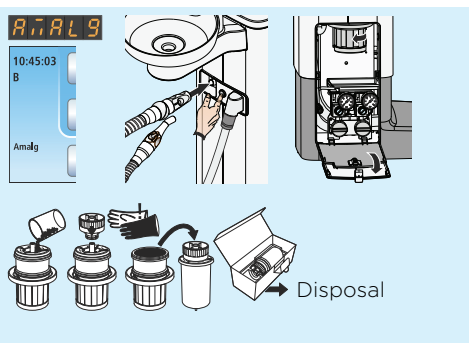

Replace amalgam rotor

IMPORTANT! The rotor must be replaced after 12 months at the latest!

1. "Amalg" appears on the user interface. Conduct disinfection.
2. Only with the unit switched on: remove amalgam rotor.
3. Fill in collected amalgam residues, close amalgam rotor.
4. Remove amalgam rotor from lower part and dispose of in an environmentally correct manner.

For more details, refer to the operating instructions.
The national requirements and recommendations for hygiene and disinfection must be observed (e.g. RKI, ADA, CDC etc).

THE DENTAL SOLUTIONS COMPANY™

Dentsply Sirona

Subject to technical changes and errors. Print no. D3543.104.01.06.02 Order no. 64 57 399 08.2018 Change no. 125 414

Intego Pro Treatment center care and cleaning plan

A continuously updated list of approved care, cleaning, and disinfecting agents can be downloaded from the Dentsply Sirona internet website under REF 59 70 905: www.dentsplysirona.com/manuals

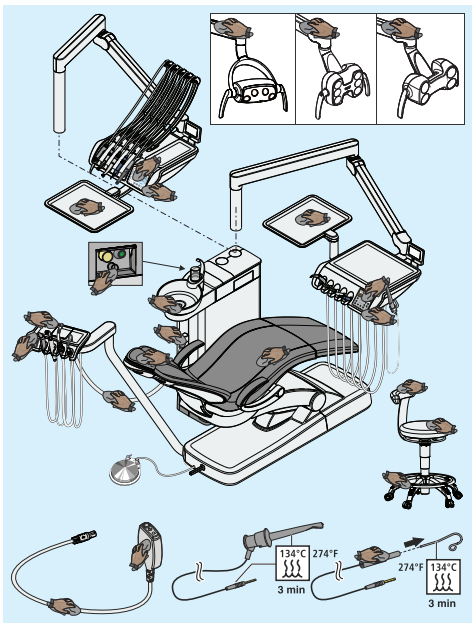

After each patient

Clean/disinfect surfaces

CAUTION! Use only care, cleaning, and disinfecting agents approved by Dentsply Sirona!

- Disinfect surfaces and upholstery
- Disinfect user interfaces
- Care, disinfection/sterilization of treatment instruments (see the operating instructions of the respective treatment instruments)
- Clean and disinfect/sterilize the components of the ApexLocator
- Disinfect instrument holders
- Disinfect handles
- Disinfecting the tray
- Disinfect connectors for suction hose cleaning
- Maintain and clean the operating light (see LEDlight, LEDlight Plus or LEDview Plus operating instructions)

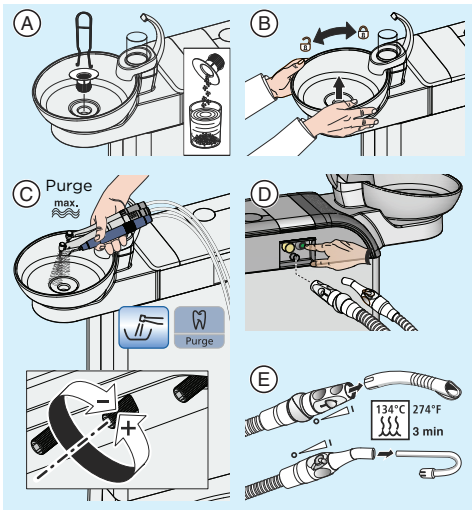

Clean/disinfect the water paths and suction system

CAUTION! Use only care, cleaning, and disinfecting agents approved by Dentsply Sirona!

A) Clean the gold trap

CAUTION! Dispose of amalgam residues in an environmentally correct manner!

B) Clean/disinfect the (removable) cuspidor bowl (special cleaning agent))

C) Purge the water lines of used dentist element instruments (Purge function)

D) Clean the suction hoses

E) Sterilize suction handpieces

To prevent reflux, please use the suction cannula with supplementary air intakes.

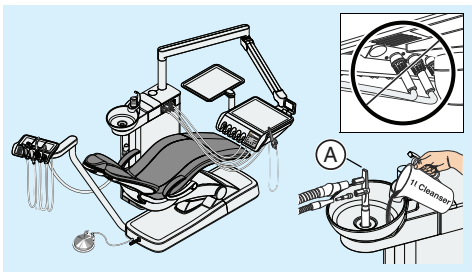

Automatically purge water lines (auto-purge function)

Insert the couplings into their corresponding adapters prior to the beginning of and at the end of the work day:

- white - turbine
- Green - BL E motor
- Blue - BL ISO E motor (ISO interface)
- Red - SiroSonic L scaler
- Yellow - Sprayvit E, water on right button
- Orange - Sprayvit E, water on left button

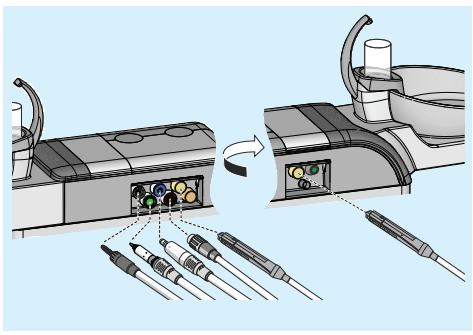

Sterilize silicone mats and handle covers

Thermally disinfect the tray and cup holder

Disinfect dentist and assistant element

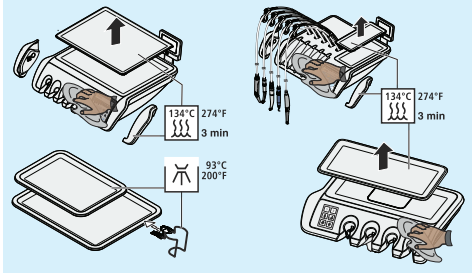

Empty the central suction sieve

Wear protective gloves when emptying the central suction sieve!

Collect amalgam residues in a closed container with water.

CAUTION! Dispose of amalgam residues in an environmentally correct manner.

Clean emptied suction sieve under running water.

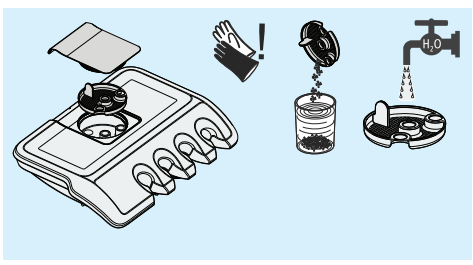

Daily

If the "Chemical hose cleaning" option is not available:

Disinfect the suction hoses using the cleaning adapters (A)

- daily at noon and
- and at the end of the work day.

Weekly

Clean and care for upholstery

CAUTION! Use only cleaning and care agents for upholstery approved by Dentsply Sirona!

Follow the instructions for use of the cleaning and care agents exactly.

Prevent agent FD360 from contacting chrome-plated surfaces.

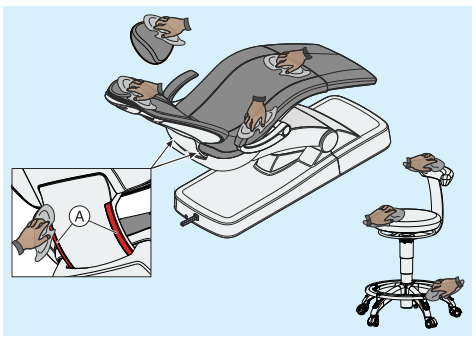

Cleaning the bottom surface of the mount (A) for the backrest component

Clean the foot switch

Clean the underside of the foot switch with a moist cloth (water).

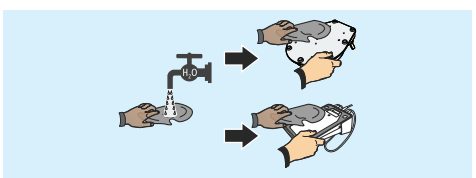

If the "Chemical hose cleaning" option is not available:

Clean drainage lines

The cleaning agents used for chemical cleaning of the hoses and of the suction system are identical (see REF 59 70 905).

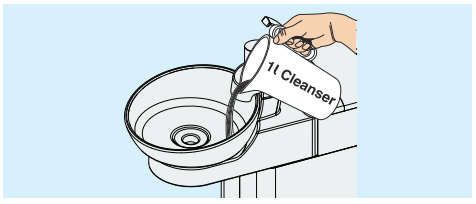

TS dentist element

Change the cotton wool roll on the turbine hose

CS dentist element

Change oil collector

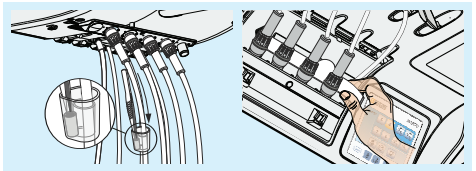

Lubricating suction handpieces

Separate suction handpieces and grease the O-rings after thermal disinfection or sterilization as well as once a week.

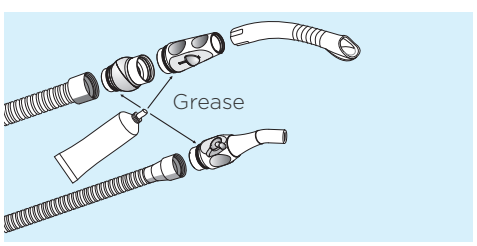

Monthly or as required

Refilling the cleaning agent tank

"chem" appears on the user interface: Refill the cleaning agent as soon as possible for chemical suction hose cleaning (optional).

Clean the filter insert of the standard wet suction

On the Start screen, press the "Extract residual water" button before removing the filter for cleaning.

Change filter (C) for water (A) and air (B)

Empty the sediment tank (D) (optional)

Wear protective gloves when emptying the sediment tank!

Microbiological water test

- At regular intervals according to results and
- after periods of disuse > 1 week.

Sanitize the treatment center

For reduction of the biofilm within the fresh water carrying systems of the treatment center

- white - turbine
- Green - BL E motor
- Blue - BL ISO E motor (ISO interface)
- Red - SiroSonic L scaler
- Yellow - Sprayvit E, water on right button
- Orange - Sprayvit E, water on left button

Cleaning the suction hoses after sanitation.

Replace amalgam rotor

IMPORTANT! The rotor must be replaced after 12 months at the latest!

1. "Amalg" appears on the user interface. Conduct disinfection.
2. Only with the unit switched on: remove amalgam rotor.
3. Fill in collected amalgam residues, close amalgam rotor.
4. Remove amalgam rotor from lower part and dispose of in an environmentally correct manner.

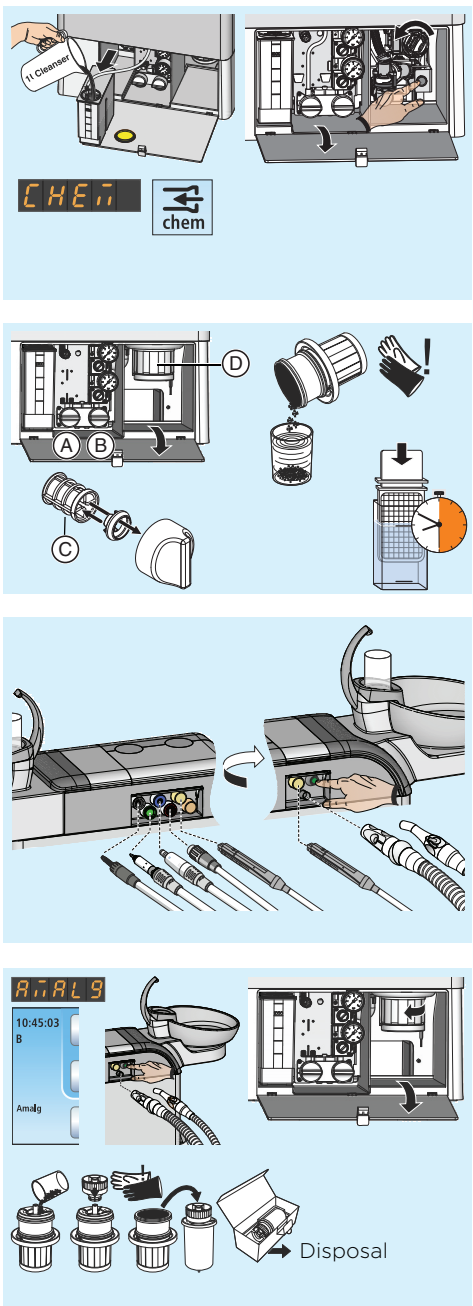

For more details, refer to the operating instructions.
The national requirements and recommendations for hygiene and disinfection must be observed (e.g. RKI, ADA, CDC etc).

Subject to technical changes and errors. Print no. D3543.104.01.06.02 Order no. 64 57 399 08.2018 Change no. 125 414

THE DENTAL SOLUTIONS COMPANY™

Dentsply Sirona